Metallurgical microscope

OKM-1

OKM 173

PROFESSIONAL MEASURING

English version

Operating instructions Metallurgical microscope

Version 1.2
2025-06
en
OKM-1-BA-e-2512.docx

de

Weitere Sprachversionen finden Sie online unter

www.kern-sohn.com/manuals

en

Further language versions you will find online under

www.kern-sohn.com/manuals

es

Más versiones de idiomas se encuentran online bajo

www.kern-sohn.com/manuals

fr

Vous trouverez d'autres versions de langue online sous

www.kern-sohn.com/manuals

it

You can find other language versions online at

www.kern-sohn.com/manuals

pl

Other language versions can be found at

www.kern-sohn.com/manuals

bg

Други езикови версии ще намерите в сайта

www.kern-sohn.com/manuals

cs

Other language versions can be found on the website

www.kern-sohn.com/manuals

da

More language versions can be found on the website

www.kern-sohn.com/manuals

el

Άλλες γλωσσικές αποδόσεις θα βρείτε στην ιστοσελίδα

www.kern-sohn.com/manuals

et

Other language versions can be found on the website

www.kern-sohn.com/manuals

fi

Other language versions can be found at

www.kern-sohn.com/manuals

hr

Other language versions are available on the page:

www.kern-sohn.com/manuals

hu

Additional language versions can be found on the following page:

www.kern-sohn.com/manuals

lt

Other language versions can be found on the website

www.kern-sohn.com/manuals

lv

You can find other language versions on the website

www.kern-sohn.com/manuals

nl

Additional language versions can be found online at

www.kern-sohn.com/manuals

no

Andre språkversjoner finnes det på

www.kern-sohn.com/manuals

pt

More language versions can be found online at

www.kern-sohn.com/manuals

ro

Old language versions can be found on the website

www.kern-sohn.com/manuals

sk

Other language versions can be found on the website

www.kern-sohn.com/manuals

sl

Other language versions are available on the website

www.kern-sohn.com/manuals

sv

Other language versions are available here

www.kern-sohn.com/manuals

KERN & Sohn GmbH
Ziegelei 1
72336 Balingen-Frommern
Germany

+0049-[0]7433-9933-0

+0049-[0]7433-9933-149

info@kern-sohn.com

www.kern-sohn.com

English

KERN Optics OKM-1

Metallurgical microscope

Operating instructions Metallurgical microscope

Version 1.2 2025-06 English version

Table of contents:

1 Technical data ... 3
2 Declaration of conformity ... 4
3 Overview of the device ... 6
3.1 Nomenclature ... 6
3.2 Rear view ... 8
3.3 Light unit ... 9
4 Before use ... 10
4.1 General ... 10
5 Basic information (general) ... 11
5.1 General information on warnings ... 11
5.2 Intended use ... 12
5.3 Improper use ... 12
5.4 Warranty ... 12
6 Basic warnings and safety instructions ... 13
6.1 Observe the instructions in the operating instructions ... 13
6.2 Staff training ... 13
6.3 Safety ... 13
7 Transportation and storage ... 16
7.1 Note ... 16
7.2 Transportation ... 16
7.3 Storage ... 16
7.4 Packaging/return transportation ... 16
8 Unpacking and commissioning ... 17
8.1 Unpacking ... 17
8.2 Initial commissioning ... 17
9 Assembly ... 18
9.1 Reflected light unit ... 18
9.2 Microscope head ... 19
9.3 Objectives ... 19
9.4 Eyepieces ... 19
10 Operation ... 20
10.1 First steps ... 20
10.2 (Pre-)focusing ... 21
10.3 Adjusting the interpupillary distance ... 22
10.4 Diopter adjustment ... 22
10.5 Adjusting the magnification ... 23
10.6 Adjusting the illumination ... 24
10.7 Using eye cups ... 25
10.8 Color filters ... 26
11 Changing the bulb ... 27
12 Using optional accessories ... 28

12.1 Camera connection 28
13 Troubleshooting 29
14 Service 32
15 Power supply 33
15.1 Mains connection 33
16 Maintenance, servicing and disposal 34
16.1 Cleaning 34
16.2 Maintenance and repair 34
16.3 Waste disposal 35
17 Further information 36

1 Technical data

Kern model	OKM 173
Item number/type	TOKM 173-B
Dimensions (WxDxH)	440x200x400 mm
Tubus type	Trinocular
Optical system	Infinity
Revolving nosepiece screw-in positions	4
L ens quality	Infinity Plan
Standard objectives	5x 10x 20x 50x
Eyepiece field width	HWF
Illuminance Incident light	5W
Type of illumination Transmitted light	LED
Lighting equipment	Incident light
Input voltage Power supply / current [max]	100 - 240V AC 50/60Hz 0.3A
Input voltage device / current [max]	5V, 1A
Plug-in power supply type	Plug-in power supply
Focusing mechanism	Coaxial coarse and fine drive
Packaging dimensions	640x380x280 mm
Net weight	8 kg
Gross weight	10 kg

2 Declaration of conformity

The current EC/EU declaration of conformity can be found online at:
https://www.kern-sohn.com/shop/de/DOWNLOADS/

3 Overview of the device

3.1 Nomenclature

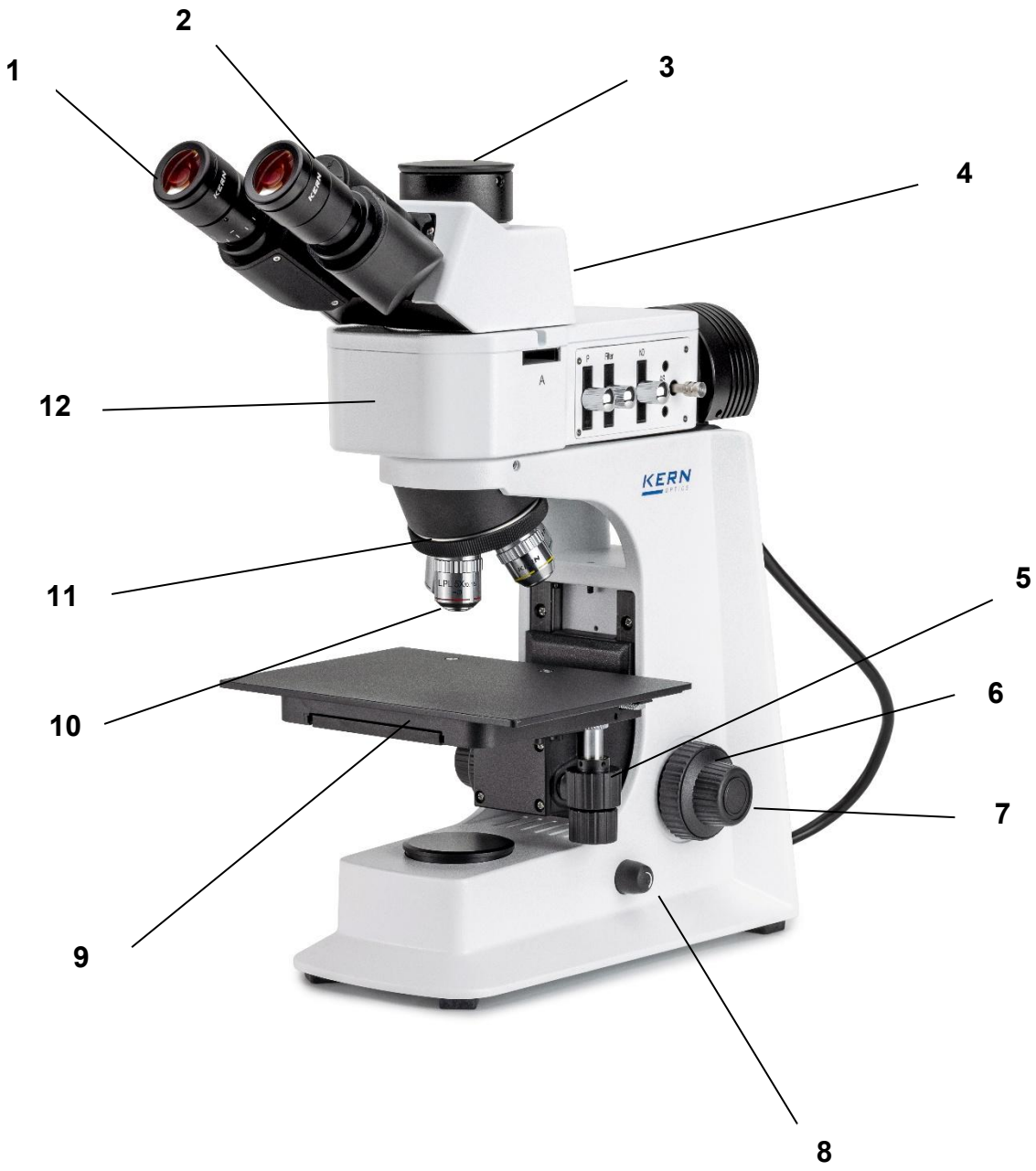

	Description
1	Eyepiece
2	Lens barrel
3	Camera adapter connection
4	Microscope head / tube
5	Adjustment wheel x-y axis Specimen stage
6	Coarse adjustment knob
7	Fine adjustment knob
8	Dimmer
9	Specimen stage
10	Objective
11	Nosepiece
12	Reflected light unit

3.2 Rear view

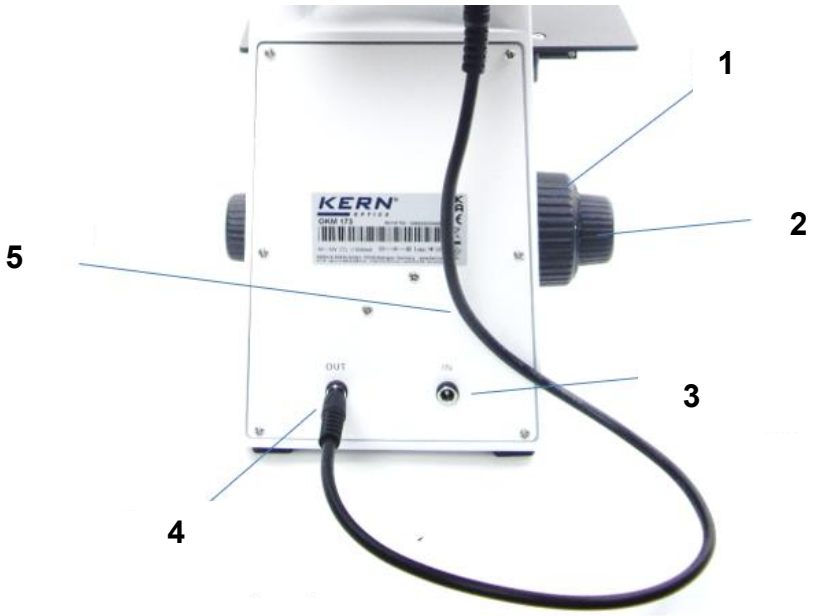

	Description
1	Coarse adjustment knob
2	Fine adjustment knob
3	Power connection (IN)
4	Connection Socket lamp housing (OUT)
5	Connection cable for reflecting light unit

3.3 Light unit

	Description
1	Analyzer
2	Polarizer
3	Filter insert / Color filter
4	Frosted glass slider
5	Aperture diaphragm

4 Before use

4.1 General

The packaging must be opened carefully to prevent the accessories inside from falling onto the floor and breaking.

In general, a microscope should always be handled with great care, as it is a sensitive precision instrument. It is therefore particularly important to avoid sudden movements during operation or transport, especially to avoid damaging the optical components.
You should also avoid dirt or fingerprints on the lens surfaces, as this will impair image sharpness in most cases.

If the performance of the microscope is to be maintained, it must never be disassembled. Parts such as objective lenses and other optical components should therefore be left as they are at the start of operation

5 Basic information (general)

5.1 General information on warnings

This operating manual uses warning notices to alert you to possible personal injury or property damage in certain situations.

Signal word	Description
DANGER	Failure to observe this warning will result in serious injury, permanent disability (e.g., loss of a limb), or death of the user or third parties.
WARNING	Failure to observe this warning may result in serious injury, permanent disability (e.g., loss of a limb), or death of the user or third parties.
CAUTION	Failure to observe this warning may result in minor injury or temporary impairment to the user or third parties (e.g., minor cuts).
NOTE	Failure to observe this warning may result in property damage.

Symbols in warning notices :

Symbol	Meaning
Warning signs	Warning signs warn you of hazards that could potentially cause personal injury. The symbol indicates the type of hazard.
	Indicates general hazards or a hazardous location
	Warning of electrical voltage
	Warning of optical radiation
	Indicates electrostatic sensitive devices

Symbol	Meaning
Commandment sign	Mandatory signs prescribe measures that you must take to prevent personal injury or property damage. The symbol indicates the necessary actions or items to prevent damage.
	Indicates a prescribed action

5.2 Intended use

The OKM-1 is versatile and is mainly used for analyzing opaque and thick specimens, workpieces (surfaces, fracture edges, coatings). It is used in metallurgy, materials testing, and quality assurance.

5.3 Improper use

Do not use the device in potentially explosive areas or for measurements in liquids or on live parts.
Unauthorized structural modifications, additions, and conversions to the device are prohibited.

5.4 Warranty

The guarantee expires in the event of

- failure to observe our specifications in the operating instructions
- Use outside the described applications
- Modification or opening of the device
- Mechanical damage and damage caused by media, liquids, natural wear and tear
- Improper installation or electrical installation
- Improper assembly or electrical installation

6 Basic warnings and safety instructions

6.1 Observe the instructions in the operating instructions

Read the operating instructions carefully before starting up/using the device, even if you already have experience with KERN devices. Always keep the instructions in the immediate vicinity of the device.

6.2 Staff training

The device may only be used by persons who have read and understood the operating instructions, in particular the chapter on safety.

6.3 Safety

⚠ WARNING	
	Read all safety information and instructions. Failure to observe the safety information and instructions may result in electric shock, fire and/or serious injury. **Keep all safety information and instructions for future reference.** ● The design of the device must not be modified. This can lead to incorrect measurement results, safety defects and destruction of the device ● Do not operate the appliance in potentially explosive rooms or areas and do not install it there. ● Do not operate the device in an aggressive atmosphere. ● Do not immerse the appliance in water. Ensure that no liquids penetrate the inside of the device. The device may only be used in a dry environment and under no circumstances in rain or relative humidity above the operating conditions. ● Protect the device from permanent direct sunlight. ● Do not expose the device to strong vibrations. ● Do not remove any safety signs, stickers or labels from the device. Keep all safety signs, stickers and labels in a legible condition ● Do not open the device ● The lamp generates a lot of heat during operation. Avoid touching the lamp housing during operation and for some time afterwards. ● Do not operate the device in an aggressive atmosphere

⚠ WARNING	
	Risk of injury due to electric shock! ● Risk of short circuit due to penetration of liquids into the housing! ● Do not immerse the appliance or accessories in water. Make sure that no water or other liquids get into the housing. ● Work on electrical components may only be carried out by an authorized specialist company! ● Take care not to twist or kink the mains cable. ●Only use the original adapter supplied

⚠ WARNING	
	Choking hazard! Do not leave the packaging material lying around carelessly. It could become a dangerous toy for children. ● The appliance is not a toy and does not belong in the hands of children. ● This appliance can be dangerous if it is used improperly or not as intended by untrained persons! Observe the personnel qualifications!!

⚠ WARNING	
	Electrostatically sensitive device! ● The device can be destroyed by electrostatic discharge. Connectors for RF signals are particularly at risk. ● Please observe the handling instructions for electrostatic-sensitive components.

⚠ WARNING	
	There is a risk from optical radiation! Gas discharge lamps, LED lights and other white light sources generate intense optical radiation, including UV (ultraviolet), visible light (VIS) and IR (infrared). This radiation can cause both skin and eye damage. The extent of the damage is determined by the wavelength, the duration of exposure and the operating mode (continuous or pulsed). ● Do not expose eyes and skin to radiation. ● Do not insert any reflective objects into the beam entrance. ● If necessary, use suitable protective equipment/protective clothing. ● Never remove the cover or cladding during operation. ● Never look into the eyepieces when the beam path is open (using the control lever for illumination) and an empty filter position is selected on the FL module. There is an acute risk of blindness here.

CAUTION

Keep a sufficient distance from heat sources.
Do not use the device in environments with high humidity or water mist.

NOTE

● To avoid damage to the device, do not expose it to extreme temperatures, extreme humidity, or moisture.
● Do not use harsh cleaners, abrasives, or solvents to clean the device.

7 Transportation and storage

7.1 Note

If you store or transport the device improperly, the device may be damaged. Observe the information on transporting and storing the appliance.

7.2 Transportation

We recommend using the original packaging for shipping, transport, or storage of the microscope components. To prevent damage from vibration, all moving parts that can be assembled and disassembled must be packed separately.

7.3 Storage

Avoid exposing the device to direct sunlight, high or low temperatures, shocks, dust, and high humidity.

The suitable temperature range is 0 - 40 °C and a relative humidity of 85% should not be exceeded.

The appliance should always be placed on a firm, smooth and horizontal surface.

When the microscope is not in use, it is best to cover it with the dust cover supplied.

Dust or dirt inside the optics of a microscope can in many cases lead to irreversible malfunctions or damage.

Accessories consisting of optical elements, such as additional lenses, are preferably stored in a drying box with desiccant.

7.4 Packaging/return transportation

Returns are only possible within the limits of the general terms and conditions. Keep all parts of the original packaging for any necessary return transport.

- Only the original packaging may be used for return transport.
- Before shipping, disconnect all connected cables and loose/movable parts.
- Reattach any transport locks that may have been provided.
- Secure all parts against slipping and damage.

8 Unpacking and commissioning

8.1 Unpacking

! In the event of a return, please observe the instructions in the chapter "Packaging/return transportation."

On receipt of the device, you should first check that no damage has occurred during transportation, that the outer packaging, the housing, other parts or even the device itself have not been damaged. If any damage is evident, please notify KERN GmbH immediately.

8.2 Initial commissioning

To ensure that the microscope functions properly, it must be assembled as described in the chapter 9 .

9 Assembly

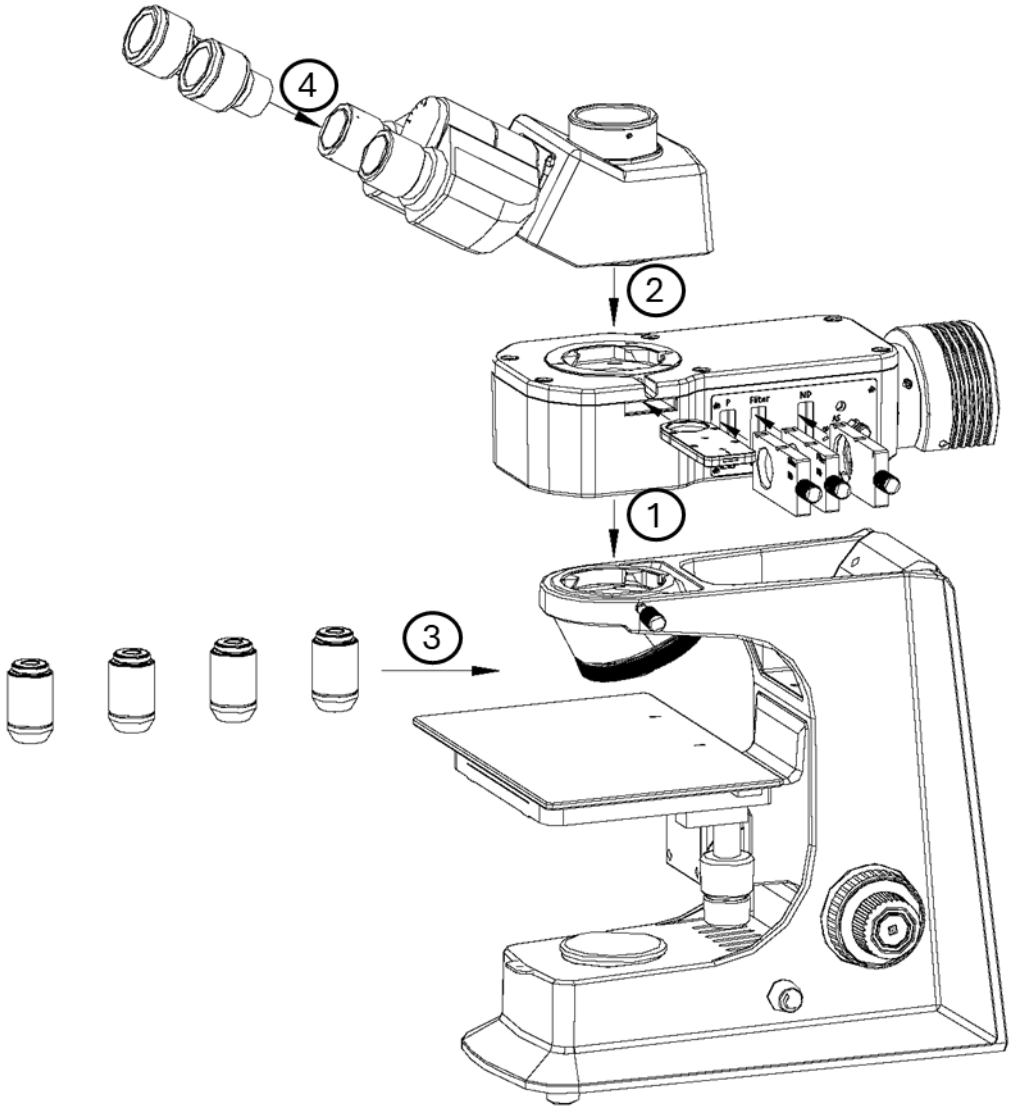

9.1 Reflected light unit

First you must loosen the fixing screw on the tube connection point and remove the black protective cover.
You can then insert the round dovetail bracket on the light unit into the round dovetail bracket on the housing and fix it with the fixing screw. When doing this, you should always make sure that you do not touch the lenses with your bare fingers and that no dust enters the apertures. The lamp housing should be straightly directed towards the rear (parallel with the microscope housing).
Now you have to attach the plug of the connecting cable to the connection socket (OUT) on the rear of the microscope. For the power supply, the connecting cable is plugged into the connection socket (IN).

Finally the analyzer and polarizer slides can be fitted to the appropriate slots

9.2 Microscope head

First you must loosen the fixing screw on the connection point of the reflected light unit and remove the black protective cover.
You can then insert the round dovetail bracket on the head into the round dovetail bracket on the light unit and fix it with the fixing screw. When doing this, you should always make sure that you do not touch the lenses with your bare fingers and that no dust enters the apertures.

9.3 Objectives

All four objectives are already screwed onto the nosepiece. They are arranged so that when the nosepiece is turned clockwise, the lens with the next higher magnification appears. If the lenses are unscrewed, you must make sure that you do not touch the lenses with your bare fingers and that no dust enters the apertures.

9.4 Eyepieces

Eyepieces with the same magnification must always be used for both eyes. These are simply placed on the tube sockets after removing the plastic protective caps. There is no option for fixing them in place. Care should always be taken not to touch the lenses with your bare fingers and to prevent dust from entering the openings.

10 Operation

10.1 First steps

The first thing to do is to connect the power supply using the power plug. The light intensity control (dimmer) should first be set to a low level so that your eyes are not immediately exposed to excessive light when you first look into the eyepieces. Now the lighting can be switched on using the main switch.

The next step is to place an object on the cross table. To move the sample (or the part of the sample to be observed) into the beam path, the adjustment wheels on the right side of the cross table must be operated accordingly (*see illustration*).

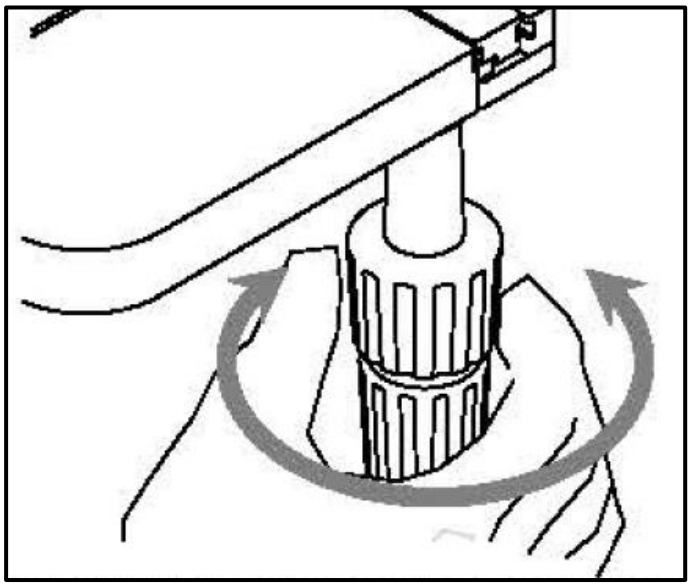

10.2 (Pre-)focusing

When you are observing an object, you must have the correct distance to the objective to achieve a sharp image.
In order to find this distance at the beginning (without other default settings of the microscope) place the objective with the lowest magnification in the beam path, look through the right eyepiece with the right eye and turn it slowly using the coarse adjustment knob *(see illustration)*.

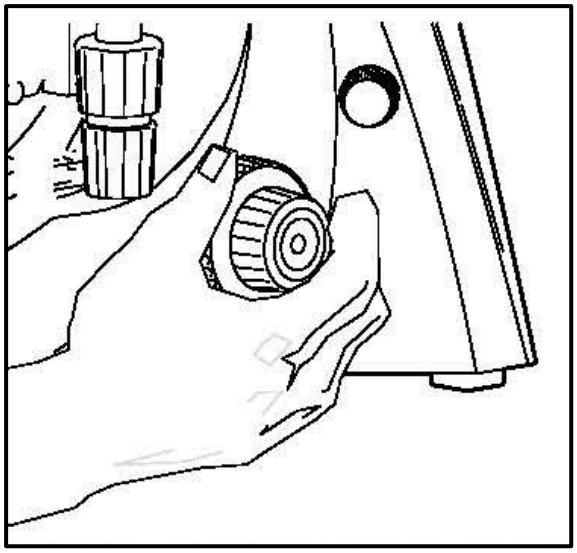

The simplest way of doing this would be to first raise the specimen stage (using the coarse adjustment knob) until it is just under the objective and then lower it slowly. As soon as an image is recognisable (no matter how sharp), then you should only adjust the focus using the fine adjustment knob.

<u>Adjusting the torque of the coarse and fine adjustment knob</u>

Next to the left adjustment wheel for the coarse and fine adjustment knob there is a ring which you can use to alter the torque of these wheels. Turning it in a clockwise direction reduces the torque and turning it in an anti-clockwise direction increases it.
On one hand, this function can help to make it easier to adjust the focus and on the other hand it can prevent the specimen stage from slipping down unintentionally.

<u>Important:</u>

In order to avoid damaging to the focussing system, the left and right adjustment wheels for the coarse and fine adjustment knob must never be rotated at the same time in opposite directions.

10.3 Adjusting the interpupillary distance

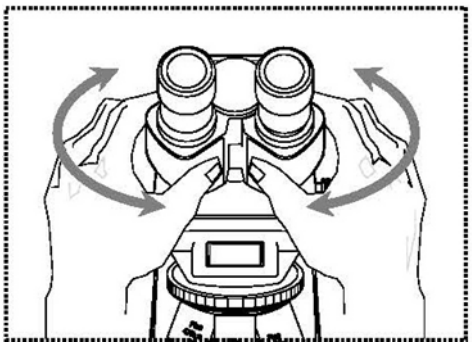

With binocular viewing, the interpupillary distance must be adjusted accurately for each user, in order to achieve a clear image of the object. While you are looking through the eyepieces, use your hands to hold the righthand and lefthand tube housing firmly. By pulling them apart or pushing them together, you can either increase or reduce the interpupillary distance (see illustration). As soon as the field of views of the lefthand and righthand eyepieces completely overlap each other, i.e. they combine to form a circular image, then the interpupillary distance is set correctly

10.4 Diopter adjustment

The eye strengths of each eye of the microscope user can often be slightly different, which in daily life has no consequences. But when using a microscope this can cause problems in achieving precise focussing.

You can use a mechanism on the left tube connector (dioptre adjustment ring) to compensate for this as follows.

1. Look through the right eyepiece with the right eye and bring the object into focus by using the coarse and fine adjustment knob.

2. Then look through the left eyepiece with the left eye and use the dioptre adjustment ring to focus the image.
   To do this, you just need to turn the ring in both directions *(see illustration)*, to find out where the image is at its most focussed.

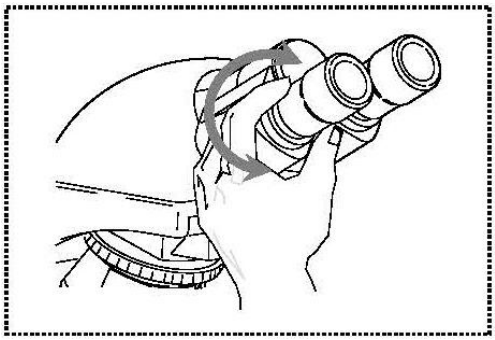

10.5 Adjusting the magnification

After prefocussing has been carried out using the objektive with the lowest magnification (*see section 10.2*), you can then adjust the overall magnification using the nosepiece, as necessary. By turning the nosepiece you can bring any one of the four other objectives into the beam path.

When adjusting the nosepiece, you must take the following points into account:

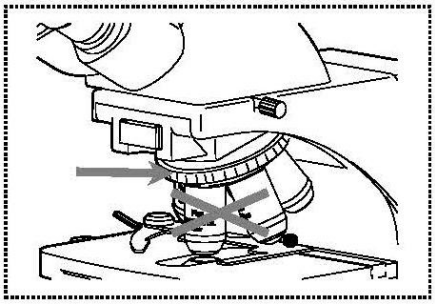

- The required objective must be properly locked in place at all times.

- The nosepiece should not be rotated by holding individual objectives, you should use the silver ring above the objectives *(see illustration)*.

- When rotating the nosepiece you must always make sure that the objective which is about to be positioned in the beam path does not touch the object holder. This can lead to significant damage to the objective lens.
  We recommend that you always check from the side to make sure that there is sufficient leeway. If this should not be the case, the specimen stage must be lowered accordingly.

If you have focussed the object to be observed for a specific magnification, then if you select the objective with the next greatest magnification, then the object will be slightly out of focus. Use the fine adjustment knob to make a slight adjustment and restore the focus.

10.6 Adjusting the illumination

To make sure that perfect image results are achieved during microscopic observation, it is important that the direction of light of the microscope is optimised.

The necessary control elements for this are:

- Aperture diaphragm
- Filter wheel
- Analyzer/Polarizer

1. Use the **aperture diaphragm** of the condenser to find the very best compromise between contrast and resolution for the microscopic image. Select the right setting in accordance with the objective being used.

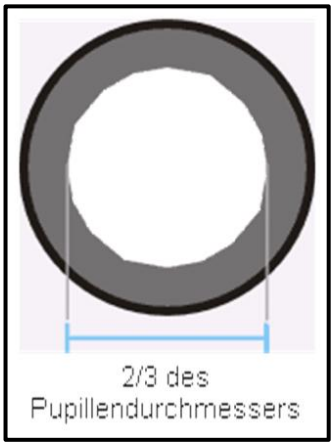

The view in the tube without the eyepiece should look something like the illustration on the right.
The diameter of the aperture diaphragm which is then visible should make up approximately 2/3 of the pupil diameter.

If the eyepiece should be removed, for checking, then please make sure that no dirt or dust falls into the tube.

The brightness is always controlled by the bulb brightness (dimmer) and not by the aperture diaphragm.

2. The **color filters** (blue, green, yellow, gray, empty) can be used to color the light, depending on the application, in order to achieve certain contrasts or to produce effects that depend on the wavelength of the light.

3. **The polarization method** is used specifically for metallurgical applications to enable microscopic examinations in this field. The main components for this are **the analyzer and polarizer.** Once the analyzer and polarizer have been inserted into the beam path using the two inserts, the microscope is ready for polarization applications.
   Depending on the type of application, the correct position of the rotary wheel on the analyzer insert must be selected.

10.7 Using eye cups

The eye cups supplied with the microscope can basically be used at all times, as they screen out intrusive light, which is reflected from light sources from the environment onto the eyepiece, and the result is better image quality.

But primarily, if eyepieces with a high eye point (particularly suitable for those who wear glasses) are used, then it may also be useful for users who don't wear glasses, to fit the eye cups to the eyepieces.

These special eyepieces are also called High Eye Point eyepieces. They can be identified by the glasses symbol on the side. They are also marked in the item description by an additional "H" (example: HSWF 10x Ø 23 mm).

When fitting the eye cups, make sure that the dioptre setting is not moved. We would therefore advise that you hold the dioptre compensation ring on an eyepiece with one hand while you fit the eye cup with the other.

Before using the microscope, users who wear glasses must remove the eye cups, which you may find on High Eye Point eyepieces.

As the eye cups are made of rubber, you must be aware that when you are using them, they can become slightly dirty through grease residues. In order to maintain hygiene, we would therefore recommend that you clean the eye cups regularly (e.g. with a damp cloth).

Eyecups

High Eye Point Eyepiece
(identified by the eyeglass symbol)

10.8 Color filters

The blue, green, and yellow color filters can be replaced individually by sliding the selected color filter into the slot labeled "Filter."

11 Changing the bulb

The OKM-1 is equipped with LEDs.
Due to the long service life of LED lighting, regular lamp replacement is not necessary with this microscope.
Problems with the lighting would therefore in most cases be caused by defects in the electrical system. In such cases, our technical service can help.

12 Using optional accessories

12.1 Camera connection

Due to the trinocular tube, which is a standard fitting for the OKM 173, it is possible to connect microscope cameras to the device, in order to digitally record images or sequences of images of an object being observed.

After the plastic cover has been removed from the camera adapter connector on the top of the microscope head, then a suitable adapter must be fitted.
In general there are two C-mount adapters available for this (1x and 0.5x magnification). After fitting one of these adapters it can be fixed with the fixing screw. A camera which has a C-mount thread is then screwed on top of the adapter.

We recommend that you first adjust the field of view using the eyepieces on the device for the existing requirements, and then carry out the observation using the microscope camera (i.e. using the PC screen which is connected).
The tube has a light distribution that guarantees the providing of light for the eyepieces and the camera connection at the same time. This means that it is possible to simultaneously observe by the eyepieces and PC screen.

For C-mount adapters, which have their own integrated magnification, the image which is shown on the camera connected to the device can often have a different level of focus compared with the image on the eyepiece.
In order to be able to bring both images into focus, the focus can be adjusted by those adapters.

13 Troubleshooting

Problem	Possible causes
Lamp does not burn	Mains plug not plugged in correctly
	No power available at the socket
	Lamp defective
Field of vision is dark	Aperture diaphragm and/or field diaphragm are not open wide enough
	The beam path selector slider is set to "Camera"
	The condenser is not centered correctly
Brightness cannot be adjusted	The brightness control is set incorrectly
	The condenser was not centered correctly
	The condenser is lowered too far
Field of vision is dark or not correct illuminated	
	The lens was not swiveled in correctly
	The beam path selector slide is in an intermediate position
	The object turret is not mounted correctly
	The condenser is not fitted correctly
	A lens is used that does not match the illumination range of the condenser
	The condenser was not centered correctly
The field of vision of one eye does not match that of the other eye	The luminous field diaphragm is closed too far
	The interpupillary distance is not set correctly
	The diopter setting was not made correctly
	Different eyepieces are used on the right and left

Problem	Possible causes
Blurred details Bad picture Poor contrast Vignetted field of view	Aperture diaphragm is not open wide enough
	Condenser is lowered too far
	The objective does not belong to this microscope
	The front lens of the lens is dirty
	An immersion lens is used without immersion oil
	The immersion oil contains air bubbles
	The condenser is not centered
	The recommended immersion oil is not used
	Dirt / dust on the lens
	Dirt / dust on the front lens of the condenser
Dirt or dust in the field of vision	Dirt / dust on the eyepieces
	Dirt / dust on the front lens of the Condensers
	Dirt / dust on the object
One side of the image is blurred	The table was not assembled correctly
	The lens is not correctly swiveled into the beam path
	The nosepiece is not mounted correctly
	The object rests with the top side facing down.
The picture flickers	The nosepiece is not correct mounted
	The lens is not mounted correctly swiveled into the beam path
	The condenser was not installed correctly centered
The coarse drive is difficult to turn	The adjusting wheel/torque is too Tightened
	The cross table is operated by a Solid body blocked.
The table moves down by itself The fine adjustment drive adjusts itself	The adjusting wheel/torque is not tightened enough

Touching the table blurs the image	The table was not assembled correctly

14 Service

If, despite studying these operating instructions, you still have questions about commissioning or operation, or if, contrary to expectations, a problem should occur, please contact your specialist dealer. The device may only be opened by trained service technicians authorized by KERN.

15 Power supply

15.1 Mains connection

The microscope may only be connected to the power supply if the information on the microscope (label) and the local mains voltage are identical.

Important:

- Check the mains cable for damage before use
- Ensure that the power supply unit does not come into contact with liquids
- The mains plug must be accessible at all times

16 Maintenance, servicing and disposal

Disconnect the device from the power supply before performing any maintenance, cleaning, or repair work.

16.1 Cleaning

The appliance must always be kept clean and regularly freed from dust.
Before wiping the appliance when it gets wet, make sure that the power is switched off.

Glass components should preferably be wiped lightly with a lint-free cloth if they become dirty.

To wipe oil stains or fingerprints from lens surfaces, the lint-free cloth is moistened with a mixture of ether and alcohol (70/30 ratio) and then cleaned

Ether and alcohol must always be handled with care as they are highly flammable substances. It is therefore essential to keep them away from naked flames and electrical appliances that are switched on and off and only use them in well-ventilated rooms.

However, organic solutions of this type should not be used to clean other components of the appliance. This could cause changes to the paintwork. It is sufficient to use a neutral cleaning agent for this purpose.

Other cleaning agents for the optical components include

- Special cleaner for optical lenses
- Special optical cleaning cloths
- Bellows
- Brush

If handled correctly and checked regularly, the microscope will function smoothly for many years.

16.2 Maintenance and repair

Do not make any changes to the device or install any replacement parts. Contact the manufacturer for repairs or device inspections.

16.3 Waste disposal

Old devices and accessories must not be disposed of with household waste.

The operator must dispose of the packaging and the device in accordance with the applicable national or regional regulations at the place of use. The device consists of various components and materials, such as:

- Electronic components (printed circuit boards, electrical cables
- Plastic (housing)
- Metal

Improper disposal of the device can have harmful effects on humans and the environment.

Proper and environmentally friendly disposal can prevent harmful effects and recover raw materials.

17 Further information

The illustrations may differ slightly from the product.

The descriptions and illustrations in this user manual are subject to change without notice. Further developments to the device may result in such changes.

All language versions include a non-binding translation.
The original German document is binding.